DWG. NO.	REVISION
AE320	B

REVISIONS

ECO NO.	LTR	DESCRIPTION	DATE	APPROVED
4199	B	SEE ECO	01/29/04	H.J.

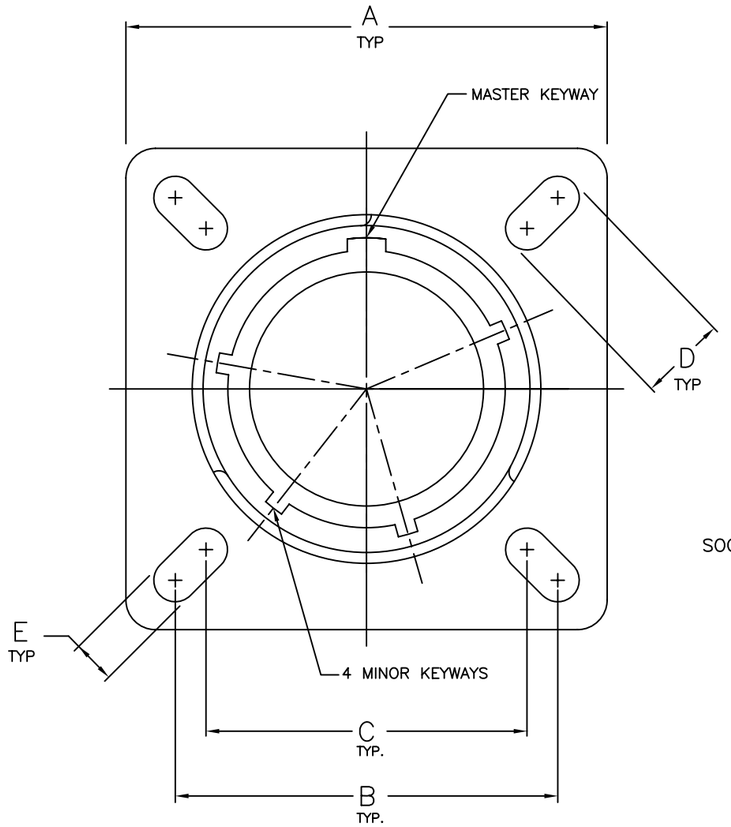

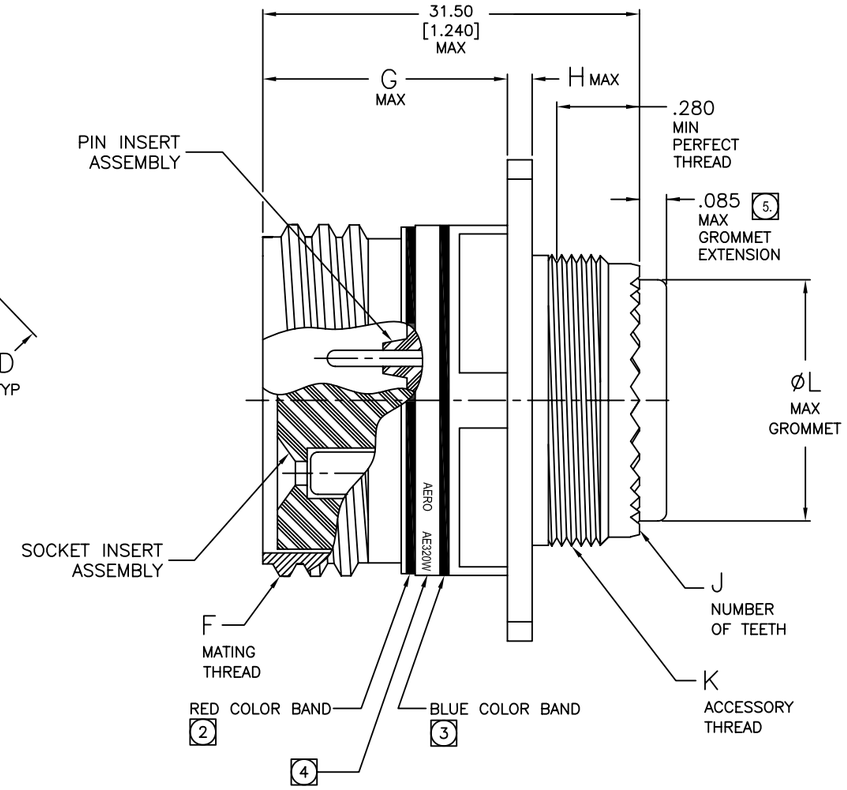

MILITARY PART NUMBER
AERO ELECTRIC PART NUMBER

D38999/ 20 W B 35 S N

AE3 20 W B 35 S N - XXX

- **AERO ELECTRIC MODIFICATION NUMBER**
- **SHELL POLARIZATION**
  N = NORMAL
  A, B, C, D and E

  NOTE: ALL MINOR KEYWAYS ARE ROTATED TO PROVIDE SHELL POLARIZATION, THE MASTER KEYWAY REMAINS FIXED.
- **CONTACT STYLE**
  P = PINS
  S = SOCKET
  A = PIN, B = SOCKET (CONNECTORS USED WITH OTHER THAN STANDARD CONTACTS.)
- **INSERT ARRANGEMENT**
  PER MIL-STD-1560
  ARRANGEMENT J46 IS AVAILABEL
  TO A.E.C. PART NUMBER
- **SHELL SIZE**
  A = 9, B = 11, C = 13, D = 15, E = 17,
  F = 19, G = 21, H = 23 & J = 25
- **CLASS/MATERIAL/FINISH**
  W - ALUMINUM, OLIVE DRAB CADMIUM OVER NICKEL
  F - ALUMINUM, ELECTROLESS NICKEL
  **G - STAINLESS STEEL, PASSIVATED, NON-FIREWALL
  *K - STAINLESS STEEL, PASSIVATED, FIREWALL
  ** BZ - NICKEL ALUMINUM BRONZE, NON-FIREWALL
- **CONNECTOR STYLE**
  20 = WALL MOUNT RECEPTACLE
- **AERO PRODUCT IDENTIFIER**
  MIL-C-38999, SERIES III

SHELL SIZE	MS SHELL CODE	A TYP INCH ±.012	A TYP MM ±0.26	B TYP INCH ±.010	B TYP MM ±0.26	C TYP INCH ±.010	C TYP MM ±0.26	D TYP INCH ±.008	D TYP MM ±0.20	E INCH ±.008	E MM ±0.20	F THREAD TRIPLE START	G MAX INCH	G MAX MM	H MAX INCH	H MAX MM	J NO OF TEETH	K ACCESSORY THREAD	ØL MAX INCH	ØL MAX MM
09	A	.937	23.80	.719	18.26	.594	15.09	.216	5.49			.6250–.1P–.3L					12	M12x1.0–6g.100R	.299	7.59
11	B	1.031	26.20	.812	20.62	.719	18.26					.7500–.1P–.3L					16	M15x1.0–6g.100R	.427	10.85
13	C	1.126	28.60	.906	23.01	.812	20.62					.8750–.1P–.3L	.820	20.83	.099	2.50	20	M18x1.0–6g.100R	.541	13.74
15	D	1.220	31.00	.969	24.61	.906	23.01	.194	4.93	.128	3.25	1.000–.1P–.3L					24	M22x1.0–6g.100R	.666	16.92
17	E	1.311	33.30	1.062	26.97	.969	24.61					1.187–.1P–.3L					28	M25x1.0–6g.100R	.791	20.09
19	F	1.437	36.50	1.156	29.36	1.062	26.97					1.250–.1P–.3L					32	M28x1.0–6g.100R	.897	22.78
21	G	1.563	39.70	1.250	31.75	1.156	29.36					1.375–.1P–.3L					36	M31x1.0–6g.100R	1.022	25.96
23	H	1.689	42.90	1.375	34.93	1.250	31.75					1.500–.1P–.3L	.790	20.07	.126	3.20	40	M34x1.0–6g.100R	1.147	29.13
25	J	1.811	46.00	1.500	38.10	1.375	34.93	.242	6.15	.154	3.91	1.625–.1P–.3L					44	M37x1.0–6g.100R	1.272	32.31

PIN CONTACTS		SOCKET CONTACT		MILITARY PART NUMBER			WIRE RANGE	CONTACT SIZE
AERO PART No.	MILITARY PART No.	AERO PART No.	MILITARY PART No.	INSERTION/REMOVAL TOOLS	SEALING PLUGS	CRIMPING TOOLS		
5245–006–2222	M39029/58–360	5045–022–2222	M39029/56–348	M81969/14–01	MS27488–22	M22520/2–01	28–22	22D
5245–007–2020	M39029/58–363	5045–019–2020	M39029/56–351	M81969/14–10	MS27488–20	M22520/1–01	24–20	20
5245–008–1616	M39029/58–364	5045–020–1616	M39029/56–352	M81969/14–03	MS27488–16	M22520/1–01	20–16	16
5245–009–1212	M39029/58–365	5045–021–1212	M39029/56–353	M81969/14–04	MS27488–12	M22520/1–01	14–12	12
*TWINAX	M39029/90–529		M39029/91–530	M81969/14–06	MS27488–8			8
*COAX	M39029/28–211		M39029/75–416	M81969/14–04	MS27488–12			12
*COAX	M39029/60–367		M39029/59–366	M81969/14–06	MS27488–8			8

*CONSULT A.E.C. FOR AVAILABILITY
**NON-MIL. SPEC. CONN. CLASS

5. GROMMET EXTENSION FOR ARRANGEMENTS CONTAINING CONTACT SIZES 8 AND 10 SHALL BE .234 MAX.

4. MARKING: "AERO", AERO PART NO., MILITARY PART NO. AND MFG DATE CODE SHALL BE LOCATED APPROXIMATELY WHERE SHOWN. MILITARY PART NO. MUST NOT BE MARKED ON CLASSES "G", AND "BZ".

3. BLUE COLOR BAND DESIGNATES REAR RELEASE CONTACT RETENTION SYSTEM.

2. RED COLOR BAND IS A FULLY MATED INDICATOR, IT IS VISIBLE WHEN UNMATED AND FULLY COVERED WHEN COMPLETELY MATED.

1. A QUANTITY OF CRIMP CONTACTS CONSISTING OF THE NORMAL COMPLIMENT, PLUS ONE SPARE CONTACT FOR ARRANGEMENTS HAVING 26 CONTACTS OR LESS AND TWO (2) SPARES FOR ARRANGEMENTS OVER 26 CONTACTS AND A MINIMUM OF ONE SEALING PLUG UP TO 15% OF THE NUMBER OF CONTACTS WILL BE INCLUDED IN THE PACKAGE.

NOTES: UNLESS OTHERWISE SPECIFIED.

MATERIAL:

RECEPTACLE SHELL.....: MACHINED ALUMINUM ALLOY
STAINLESS STEEL
NICKEL ALUMINUM BRONZE
CONTACT RETENTION CLIP.....: BERYLLIUM COPPER ALLOY
GROMMET, INTERFACIAL SEAL.....: SILICONE/FLUOROSILICONE ELASTOMER
PERIPHERAL SEAL.....: SILICONE/FLUOROSILICONE ELASTOMER
INSULATOR.....: REINFORCED EPOXY AND OTHER RIGID DIELECTRIC FIREWALL MATERIAL

NEXT ASSY	USED ON
APPLICATION	

THIS DRAWING AND THE DATA DISCLOSED HEREIN OR HEREWITH IS CONFIDENTIAL AND PROPRIETARY AND IS NOT TO BE REPRODUCED, USED, OR DISCLOSED IN WHOLE OR IN PART TO ANYONE WITHOUT THE EXPRESSED WRITTEN PERMISSION OF AERO ELECTRIC CONNECTOR SYSTEMS INC.

ITEM NO.	QTY REQD	CAGE NO.	PART OR IDENTIFYING NO.	NOMENCLATURE OR DESCRIPTION	MATERIAL OR FINISH	ZONE

PARTS LIST

UNLESS OTHERWISE SPECIFIED: DIMENSIONS ARE IN INCHES
TOLERANCES ON:
DECIMALS .X ± .1 .XX ± .01 .XXX ± .005
ANGULAR ± 0° 30'
FRACTIONS ± 1/32
DO NOT SCALE DRAWING

MATERIAL
FINISH
TREATMENT

CONTRACT NO.
DRAWN J. Aguilar DATE 9/3/98
CHECK DATE
APPROVED H. J. DATE 9/3/98
CAD FILENAME: F:\AE320\CUD.B

conesys™ Aero Electric Connector Inc. 548 Amapola Ave. Torrance, CA 90501

TITLE CUSTOMER USE DRAWING
THREADED RECEPTACLE CONNECTOR, WALL MOUNT
CLASSES "W", "F", "G", "BZ" & "K"
REF: MIL-DTL-38999, SERIES III

SIZE D CAGE NO. 59976 DWG. NO. AE320
SCALE NONE SHEET 1 of 1

DWG. NO. AE320 REV. B